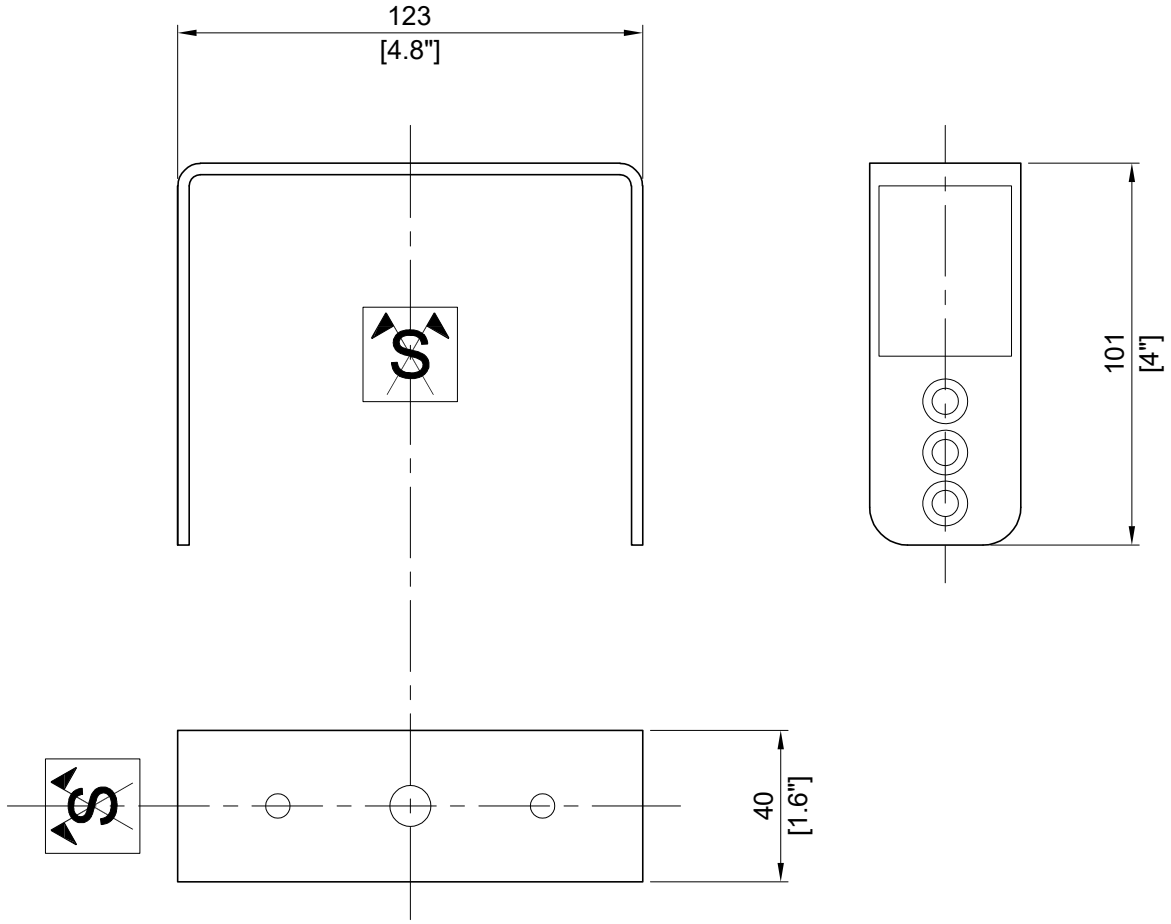

3D View

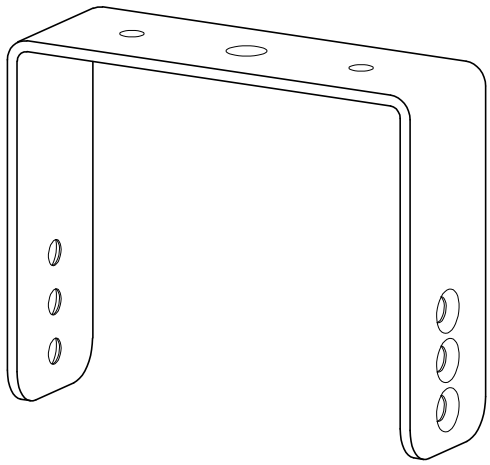

RIGGING ELEMENT

X-U4i

Drawed	By: DAVID.LY Date: 2021-07-15	Format: A4	Scale: 1:2	Weight (Kg/lbs): 0.3 kg / 0.7 lb	Dimension: mm / inches	Referential axis of symmetry

These drawing are the property of *L-ACOUSTICS*. All reproduction, copy or communication is forbidden without written permission.